BERENDSEN
FLUID POWER

Char-Lynn Orbital Motors Quick Reference Guide

EATON
Char-Lynn

CALL 1800 660 249
info@berendsen.com.au

History of Char-Lynn Motors and Steering

In the late 1950's the original low speed, high torque hydraulic motor was developed from a pump Geroter element consisting of an internal gear ring and a mating gear or star. While attaching the internal gear ring to the housing as a non moving part, oil was ported to pressurise and turn the internal star in an orbit around a centre point. This slow turning star coupled with a splined drive to the output shaft became the Char-Lynn Orbit® motor.

A few years after this original Char-Lynn Orbit motor was introduced another original motor concept went into production. This motor had rolls incorporated into the internal gear ring, this element was identified by the name Geroler and is a registered trade name of Eaton Hydraulics. From these early years the Geroler motor has seen many design changes to make these Geroler motors the best the industry has to offer.

Berendsen Fluid Power is a major Australian distributor of Eaton products and systems; and with world leading brands such as Char-Lynn, Vickers and Eaton behind us, our partnership has kept the wheels of Australian industry in motion for decades.

We also stock and distribute a broad range of premium brands with which we have long-standing relationships including Hydraforce, Oil Control, MP Filtri, Salami, Nordon, PowerTeam, Olaer and Ausco.

Berendsen Fluid Power was formed in 1993 and is an Australian owned and operated hydraulics company with 10 hydraulic service centres nationwide. Our experienced personnel can assist with the selection of hydraulic products, service and repair of hydraulic equipment, manufacture of tailored products including cylinders and power units, as well as design, installation and commissioning of small to large hydraulic systems.

Locally Available Series

Spool Valve Series:	J, H, S, T,
Disc Valve Series:	2,000, 4,000, 6,000, 10,000

- ✓ Wide range of quality hydraulic product
- ✓ Nationwide branch network
- ✓ On site and in-house service and repairs
- ✓ Hydraulic product manufacture
- ✓ Engineering, design and project management

Table of Contents

Char-Lynn

		Page No.
J Series Motors	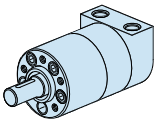	1
H Series Motors	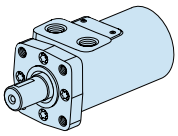	3
S Series Motors	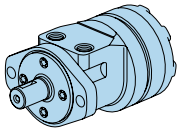	5
T Series Motors	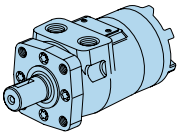	7
2,000 Series Motors	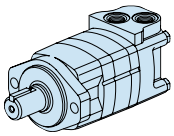	9
4,000 Series Motors	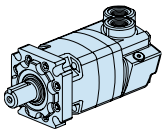	11
6,000 Series Motors	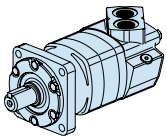	13
10,000 Series Motors	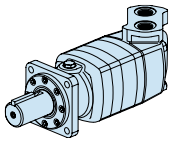	15
Steering Units	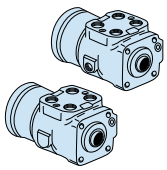	17

BERENDSEN FLUID POWER

The product information and specifications within this catalogue should be viewed as a guide only and are subject to change without notice. Please contact your Berendsen branch representative for detailed technical information.

J SERIES MOTORS

Char-Lynn

Features
- Current Design 002
- Intermittent operation 10% of every minute

Seal Kits	
129-XXXX-001	60554-000
129-XXXX-002	60580-000

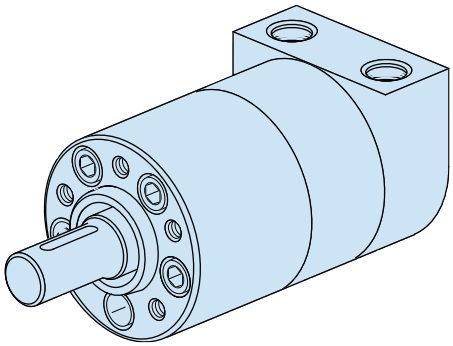

Available Options

Displacement Size
- 8,2cc [.50ci]
- 12,9cc [.79ci]
- 19,8cc [1.21ci]
- 31,6cc [1.93ci]
- 50,0cc [3.00ci]

Mounting Flange
- 5 Bolt: Dia. 31,47 [1.239] x 5,1 [.20] Pilot 1/4-28 UNF - 2B Mounting Holes on 45 [1.77] Dia. Bolt Circle
- 5 Bolt: Dia. 31,47 [1.239] x 5,1 [.20] Pilot M6 x 1 - 6H Mounting Holes on 45 [1.77] Dia. Bolt Circle
- 2 Bolt: Dia. 62,99 [2.480] x 2,0 [.08] Pilot 10,36 [.408] Mounting Holes on 80,0 [3.150] Dia. Bolt Circle
- 2 Bolt: Dia. 62,99 [2.480] x 2,0 [.08] Pilot 9,0 [.354] Mounting Holes on 80,0 [3.150] Dia. Bolt Circle

Output Shaft
- 5/8 inch Dia. Straight with 4,72 [.186] Square Key and 1/4-28 UNF - 2B Threaded Hole
- 16 mm Dia. Straight with 5,00 [.197] Square Key with M6 x 1 - 6H Threaded Hole
- 11/16 inch Dia. Straight with 4,72 [.186] Square Key and 1/4-28 UNF - 2B Threaded Hole
- 18 mm Dia. Straight with 5,92 [.233] Square Key with M6 x 1 - 6H Threaded Hole
- Involute 9T Splined—Metric 16,5 [.650] Dia. (B 17 x 14 DIN 5482) M6 x 1 Threaded Hole
- 5/8 inch Dia. Straight with 4,75 [.187] Dia. Crosshole
- 3/4 inch Tapered with woodruff Key and Nut

Port Type
- 9/16-18 UNF - 2B O-ring End Ported
- G 1/4 (BSP) End Ported
- M14 x 1,5 - 6H O-ring Port, End Ported
- 9/16-18 UNF - 2B O-ring Side Ported
- G 3/8 (BSP) Side Ported
- G 1/4 (BSP) Side Ported
- G 3/8 (BSP) End Ported

Case Drain
- No Case Drain
- 3/8-24 UNF - 2B O-ring
- G 1/8 (BSP)
- M10 x 1 - 6H O-ring

Special Features Available
- Reverse Rotation
- Painted Low Gloss Black
- Corrosion Protected

J SERIES MOTORS

Char-Lynn

Intermittent operation 10% of every minute

Disp. Cu.in. (cc)	Max. bar Cont. (int.)	Torque Nm Cont. nt.)	Max. rpm Cont. (int.)	5 Bolt mount				Approx unpacked weight (Kgs)
				5/8" Str.		16mm Str.		
				9/16" UNO		G3/8		
				Side	End	Side	End	
0.5 (8.2)	140 (165)	16 (19)	1992 (2446)	129-0017	129-0001	129-0021	129-0113	3kg
0.79 (12.9)		25 (30)	1575 (1875)	129-0018	129-0002	129-0022	129-0114	3kg
1.21 (19.8)		38 (46)	1043 (1240)	129-0019	129-0003	129-0023	129-0115	3kg
1.93 (31.6)	121 (150)	50 (62)	650 (770)	129-0020	129-0004	129-0024	129-0116	3kg

Note: A simultaneous maximum speed and maximum torque is not permitted.

Exploded View

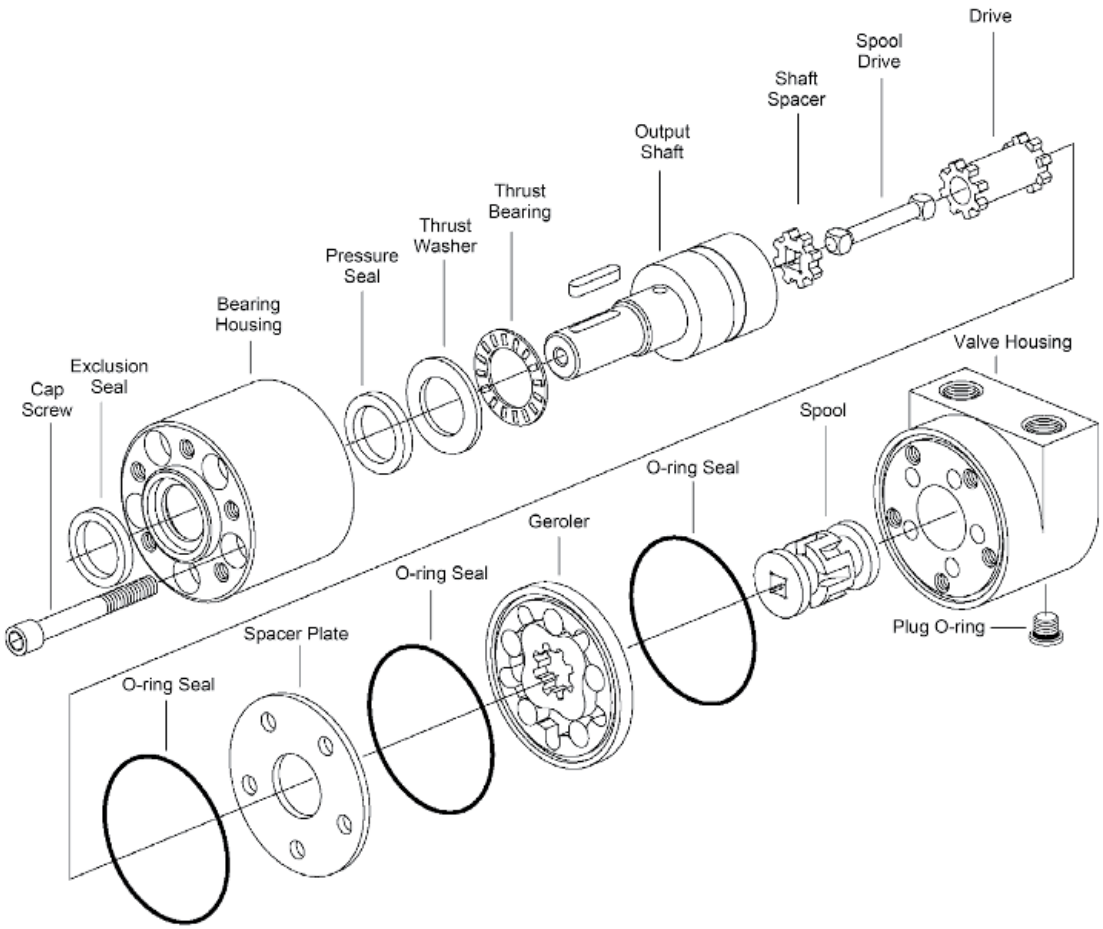

Spare Parts

Spare Parts - 002	5/8" Str.	16mm Str.
Shafts	201354-001	201354-002
2 Bolt Flange	60553-000 (M8)	60552-000 (3/8)
Seal Kit Buna N	60580-000	

Please Note: Depending on the Ports you have the 5 bolt mounting holes will have a different thread. Please select the 2 bolt flange part number under what motor. Motors are not economical to repair unless it is just a seal kit.

Spare Parts -001	5/8" Str.	16mm Str.
Shafts	23020-001	23020-002
2 Bolt Flange	60552-000 (3/8)	60553-000 (M8)
Seal Kit Buna N	60580-000	

H SERIES MOTORS

Char-Lynn

Features

- Current Design 101-xxxx-009
- Basic spool valve Gerotor motor for economical solutions
- Symmetrical design and equal performance in both directions
- Isolated drain for longer bearing and seal life, which also allows external drain option for series circuit, or closed loop applications
- Remov able mounting flange for serviceability.
- Motors that have an * after the numbers, refers to free running Gerotor motors.

Seal Kits	
101-XXXX-007	60023-000
101-XXXX-008,009	60540-000

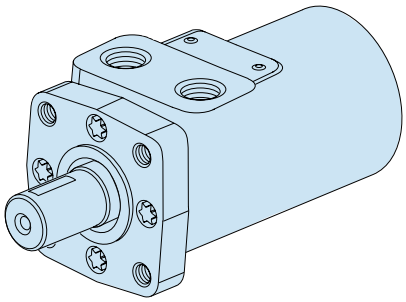

Available Options

Displacement Size

- 37cc [2.2ci]
- 46cc [2.8ci]
- 59cc [3.6ci]
- 74cc [4.5ci]
- 96cc [5.9ci]
- 120cc [7.3ci]
- 146cc [8.9ci]

Mounting Flange

- 2 Bolt (Std.) 82,6 [3.25] Pilot Dia. and 13,59 [.535] Dia. Mounting Holes 106,2 [4.18] Dia. B.C.
- 4 Bolt (Std.) 44,4 [1.75] Pilot Dia. and 3/8-16 Mounting Holes 82,6 [3.25] Dia. B.C.
- 4 Bolt (Std.) 44,4 [1.75] Pilot Dia. and M10 x 1,5 Mounting Holes 82,6 [3.25] Dia. B.C.
- 2 Bolt (Std.) 101,6 [4.00] Pilot Dia. and 14,35 [.565] Dia. Mounting Holes 146,0 [5.75] Dia. B.C. (SAE B)
- 4 Bolt Magneto 82,6 [3.25] Pilot Dia. and 13,59 [.535] Dia. Mounting Holes 106,2 [4.18] Dia. B.C.

Output Shaft

- 1 inch Dia. Straight with Woodruff Key and 1/4-20 Threaded Hole
- 1 inch Dia. SAE 6B Splined with 1/4-20 Threaded Hole
- 1 inch Dia. Straight with 7,9 [.31] Dia. Crosshole 11,2 [.44] from End
- 1 inch Dia. Straight with 10,2 [.40] Dia. Crosshole 15,7 [.62] from

End and 1/4-20 Threaded Hole

- 7/8 inch Dia. SAE B 13 T Splined
- 7/8 inch Dia. SAE B Straight with Square Key
- 1 inch Dia. Tapered with Woodruff Key and Nut
- 25mm Dia. Straight with 8mm Key and 8mm x 1,2 Threaded Hole
- 1 inch Dia. Straight with Woodruff Key and 1/4-20 Threaded Hole (Plated for Corrosion Protection)
- 25mm Dia. Straight with 8mm Key and 8mm x 1,2 Threaded Hole (Plated for Corrosion Protection)
- 1 inch Dia. Straight with 10,2 [.40] Dia. Crosshole 15,7 [.62] from End and 1/4-20 Threaded Hole (Plated...)
- 1 inch Dia. Tapered with Woodruff Key and Nut (Plated for Corrosion Protection)

Port Type

- 7/8-14 O-ring
- 1/2-14 NPTF
- Manifold (5/16-18 Mounting Threads)
- Manifold (M8 x 1,25 Mounting Threads)
- G 1/2 (BSP) O-ring
- 3/4-16 End Ported
- G 1/2 (BSP) End Ported

Case Drain

- No Case Drain
- 7/16-20 O-ring Port (End Cap)
- G 1/4 (BSP End Cap)

Special Features Available

- Free Running Gerotor
- Low Speed Valve
- Viton® Shaft Seal
- Reverse Rotation
- Flange Rotated 90
- Corrosion Protected
- Speed Sensor

H SERIES MOTORS

Char-Lynn

Disp. Cu.in. (cc)	Max. bar Cont. (int.)	Torque Nm Cont. (int.)	Max. rpm Cont. (int.)	4 Bolt	SAE-A 2 Bolt	4 Bolt	SAE-A 2 Bolt		Approx unpacked weight (Kgs)
				1"				25mm	
				Straight		6B Splined		Straight	
				7/8" UNO Ports					
				No C/D	No C/D	No C/D			
2.2 (36)	124 (165)	56 (75)	1021 (1021)	101-1749*	101-1700*	101-1761*	101-1721*	101-2241*	5.0
2.8 (46)		73 (99)	969 (1127)	101-1009	101-1033	101-1057	101-1081	101-2242	5.0
3.6 (59)		91 (122)	953 (1080)	101-1750*	101-1701*	101-1762*	101-1722*	101-3291*	5.0
4.5 (74)		118 (158)	760 (904)	101-1010	101-1034	101-1058	101-1082	101-2022	5.0
5.9 (97)		155 (207)	585 (701)	101-1011	101-1035	101-1059	101-1083	101-2529	5.5
7.3 (120)		192 (257)	469 (626)	101-1751	101-1702	101-1872	101-1723	-	5.5
8.9 (146)	117 (159)	221 (300)	385 (513)	101-1752	101-1703	101-1763	101-1724	-	5.5
9.7 (159)	114 (155)	233 (319)	353 (471)	101-1012	101-1036	101-1060	101-1084	101-2174	5.5
11.3 (185)	110 (148)	265 (356)	304 (405)	101-1013	101-1037	101-1061	101-1085	101-3324	5.5
14.1 (231)	100 (138)	302 (415)	243 (324)	101-1014	101-1038	101-1062	101-1086	-	6.5
17.9 (293)	93 (124)	351 (466)	192 (256)	101-1015	101-1039	101-1063	101-1087	-	6.0
22.6 (370)	86 (103)	407 (484)	152 (202)	101-1016	101-1040	101-1064	101-1088	101-3028	6.5

Note: A simultaneous maximum speed and maximum torque is not permitted.

Exploded View

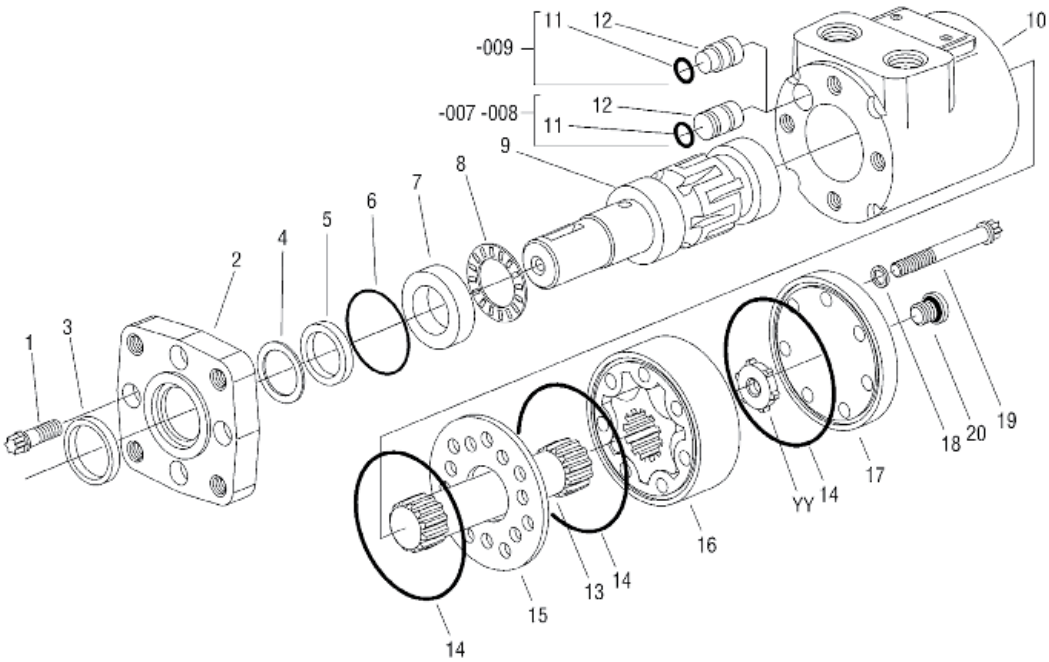

Spare Parts

Series of Motor

Type	Description	-007	-008	-009
Shafts	1" Str. Keyed	7360-001		
	1" 6B Spline	7360-002		
	7/8" 13T Spline	7360-016		
	25mm Str. Keyed	7360-024		
Flange	SAE-A 2 bolt	7463-000	22000-001	
	SAE-A 4 bolt	7464-000	22000-002	
	SAE-B 2 bolt	-	22000-004	

Series of Motor

Type	Description	-007	-008	-009
Seal Kits	Seal Kit Std. (Buna N)	60023-000	60540-000	
	Seal Kit Std. (Viton)	60032-000	60545-000	
Shaft Seals	Shaft Seal Std.	9057-001	9057-014	
	High Pressure	N/A	14778-001 replaced by 5995483-001	
End Cap	End Cap 7/16" UNO Drain Port	7611-000		

S SERIES MOTORS

Char-Lynn

Features

- Current Design 103-xxxx-012
- Spool Valve motor with Higher Efficiency Geroler Displacement elements
- Higher Pressure rating and output Torques
- Symmetrical design for equal performance in both directions
- External Drain provision as local standard
- Removable mounting flange for easy serviceability

Seal Kits	
103-XXXX-008	60533-000
103-XXXX-009,010	60539-000
103-XXXX-011	60564-000
103-XXXX-012	9900101-000

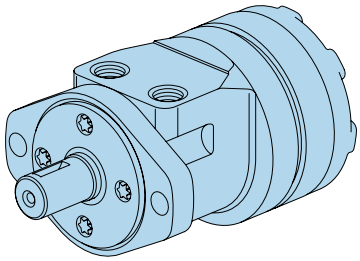

Available Options

Displacement Size

- bullet points
- 59cc [3.6ci]
- 74cc [4.5ci]
- 97cc [5.9ci]
- 120cc [7.3ci]
- 146cc [8.9ci]
- 159cc [9.7ci]
- 185cc [11.3ci]
- 231cc [14.1ci]
- 293cc [17.9ci]
- 370cc [22.6ci]

Mounting Flange

- 2 Bolt (Std.) 82,6 [3.25] Pilot Dia. and 13,59 [.535] Dia. Mounting Holes 106,2 [4.18] Dia. B.C.
- 4 Bolt (Std.) 44,4 [1.75] Pilot Dia. and 3/8-16 Mounting Holes 82,6 [3.25] Dia. B.C.
- 4 Bolt (Std.) 44,4 [1.75] Pilot Dia. and M10 x 1,5 Mounting Holes 82,6 [3.25] Dia. B.C.
- 2 Bolt (Std.) 101,6 [4.00] Pilot Dia. and 14,35 [.565] Dia. Mounting Holes 146,0 [5.75] Dia. B.C. (SAE B)
- 4 Bolt Magneto 82,6 [3.25] Pilot Dia. and 13,59 [.535] Dia. Mounting Holes 106,2 [4.18] Dia. B.C.

Output Shaft

- 1 inch Dia. Straight with Woodruff Key and 1/4-20Threaded Hole
- 1 inch Dia. SAE 6B Splined with 1/4-20 Threaded Hole
- 1 inch Dia. Straight with 7,9 [.31] Dia. Crosshole 11,2 [.44] from End
- 1 inch Dia. Straight with 10,2 [.40] Dia. Crosshole
- 7/8 inch Dia. SAE B 13 T Splined
- 7/8 inch Dia. SAE B Straight with Square Key
- 1 inch Dia. Tapered with Woodruff Key and Nut
- 25mm Dia. Straight with 8mm Key and 8mm x 1,2 Threaded Hole
- 1 inch Dia. Straight with Woodruff Key and 1/4-20 Threaded Hole (Plated for Corrosion Protection)

Port Type

- 7/8-14 O-ring
- 1/2-14 NPTF
- Manifold (5/16-18 Mounting Threads)
- Manifold (M8 x 1,25 Mounting Threads)
- G 1/2 (BSP) O-ring

Case Drain

- No Case Drain
- 7/16-20 O-ring Port (End Cap)
- G 1/4 (BSP End Cap)

Special Features Available

- Low Speed Valve
- Viton Shaft Seal
- Reverse Rotation
- Flange Rotated 90deg
- Corrosion Protected

CALL 1800 660 249
info@berendsen.com.au

S SERIES MOTORS

Char-Lynn

Disp. Cu.in. (cc)	Max. bar Cont. (int.)	Torque Nm Cont. (int.)	Max. rpm Cont. (int.)	SAE-A 2 Bolt		4 Bolt		Approx unpacked weight (Kgs)
				1" Shaft				
				Straight	6B Splined	Straight	6B Splined	
				7/8" UNO Ports - 7/16" External Drain				
3.6 (59)	138 (172)	115 (114)	963 (1155)	103-1635	-	103-1638	-	7.5
4.6 (75)		150 (186)	792 (991)	103-2034	103-2082	103-2010	-	7.5
5.7 (9.7)		183 (225)	607 (811)	103-2035	103-2739	103-2011	-	7.5
7.3 (120)		237 (292)	472 (631)	103-1639	-	103-1640	-	7.5
8.8 (144)	131 (162)	265 (324)	394 (523)	103-3374	-	103-1641	-	8
10.1 (166)	131 (159)	301 (360)	343 (457)	103-2036	103-2084	103-2012	103-2060	8
11.4 (187)	128 (155)	333 (399)	304 (405)	103-2037	103-2085	103-2013	-	8
13.7 (225)	117 (141)	372 (434)	253 (337)	103-2038	130-2086	103-2014	103-2062	8.5
18.2 (298)	103 (124)	491 (505)	190 (254)	103-2039	103-2087	103-2015	103-2063	9
22.7 (372)	90 (103)	528 (587)	153 (204)	103-2040	103-2088	103-2016	-	10

Note: A simultaneous maximum speed and maximum torque is not permitted.

Exploded View

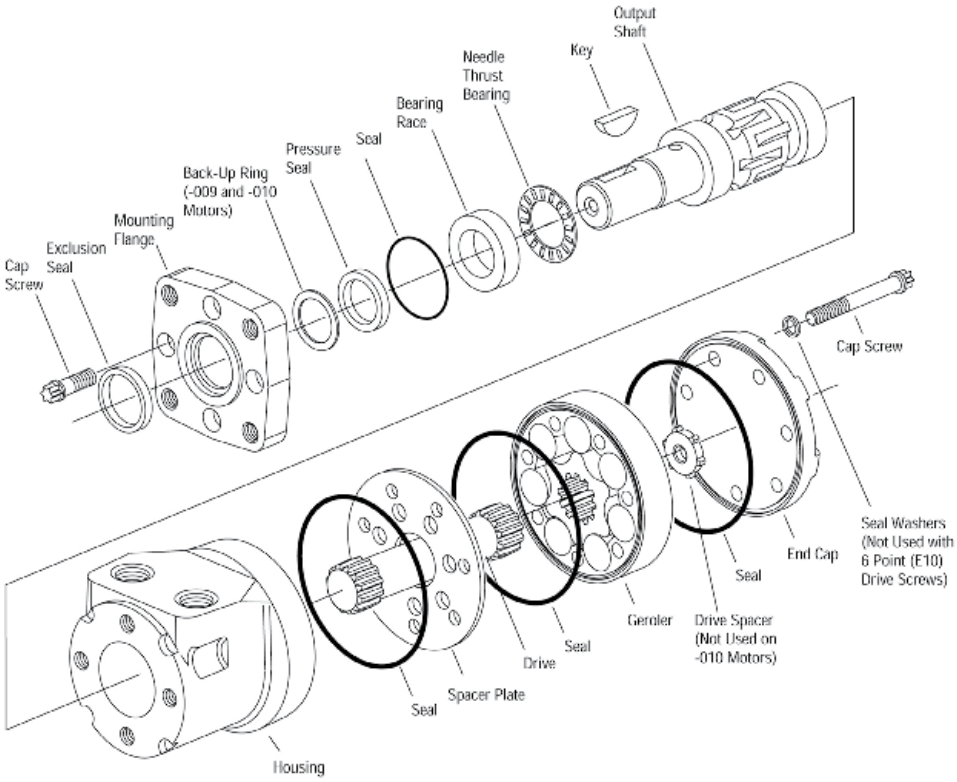

Spare Parts

Series of Motor

Type	Description	-008	-009	-010	-011	-012
Shafts	1" Str. Keyed	7360-001				201616-001
	1" 6B Spline	7360-002				201616-002
	7/8" 13T Spline	7360-016				201616-016
	25mm Str. Keyed	7360-024				201616-024
	1 Str. Keyed - Low Speed Valving	-				202192-001
Seal Kits	Seal Kit Std. (Buna N)	60533-000	60539-000		60564-000	9900101-000
	Seal Kit Std. (Viton)	60534-000	60546-000		60564-000	9900100-000

Series of Motor

Type	Description	-008	-009	-010	-011	-012
Shaft Seal	Shaft Seal Std.	9057-001	9057-014			
	High Pressure	14778-001 replaced by 5995483-001				
Front Flange	SAE-A 2 bolt mount	7463-000	22000-001			
	SAE-A 4 bolt mount	7464-000	22000-002			
	SAE-B 2 bolt mount	8281-000	22000-004			
	Magneto mount	8717-000	22000-005			

T SERIES MOTORS

Char-Lynn

Features

- Current Series is a 158-xxxx-001
- Different design of Geroler displacement element for higher pressure and Torque Ratings
- Highest Ratings in the spool valve motors (better perfomance then the S series motors)
- Symmetrical design for equal performance in both directions.

Seal Kits	
158-XXXX-001	60564-000

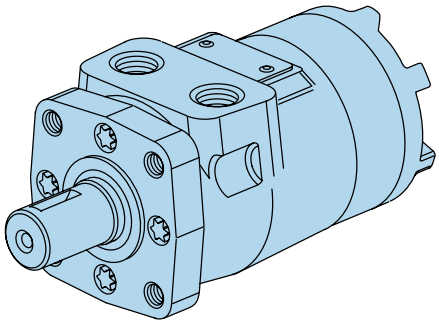

Available Options

Displacement Size

- 36cc [2.2ci]
- 49cc [3.0ci]
- 66cc [4.0ci]
- 80cc [4.9ci]
- 102cc [6.2ci]
- 131cc [8.0ci]
- 157cc [9.6ci]
- 195cc [11.9ci]
- 244cc [14.9ci]
- 306cc [18.7ci]
- 370cc [22.6ci]

Mounting Flange

- 2 Bolt (Std.) 82,6 [3.25] Pilot Dia. and 13,59 [.535] Dia. Mounting Holes 106,2 [4.18] Dia. B.C.
- 4 Bolt (Std.) 44,4 [1.75] Pilot Dia. and 3/8-16 Mounting Holes 82,6 [3.25] Dia. B.C.
- 4 Bolt (Std.) 44,4 [1.75] Pilot Dia. and M10 x 1,5 Mounting Holes 82,6 [3.25] Dia. B.C.
- 2 Bolt (Std.) 101,6 [4.00] Pilot Dia. and 14,35 [.565] Dia. Mounting Holes 146,0 [5.75] Dia. B.C. (SAE B)
- 4 Bolt Magneto 82,6 [3.25] Pilot Dia. and 13,59 [.535] Dia. Mounting Holes 106,2 [4.18] Dia. B.C.

Output Shaft

- 1 inch Dia. Straight with Woodruff Key and 1/4-20 Threaded Hole
- 1 inch Dia. SAE 6B Splined with 1/4-20 Threaded Hole
- 1 inch Dia. Straight with 7,9 [.31] Dia. Crosshole 11,2 [.44] from End
- 1 inch Dia. Straight with 10,2 [.40] Dia. Crosshole 15,7 [.62] from End and 1/4-20 Threaded Hole
- 7/8 inch Dia. SAE B 13 T Splined
- 7/8 inch Dia. SAE B Straight with Square Key
- 1 inch Dia. Tapered with Woodruff Key and Nut
- 25mm Dia. Straight with 8mm Key and 8mm x 1,2 Threaded Hole
- 1 inch Dia. Straight with Woodruff Key and 1/4-20 Threaded Hole (Plated for Corrosion Protection)

Port Type

- 7/8-14 O-ring
- 1/2-14 NPTF
- Manifold (5/16-18 Mounting Threads)
- Manifold (M8 x 1,25 Mounting Threads)
- G 1/2 (BSP) O-ring

Case Drain

- No Case Drain
- 7/16-20 O-ring Port (End Cap)
- G 1/4 (BSP End Cap)

Special Features Available

- Low Speed Valve
- Viton® Shaft Seal
- Reverse Rotation
- Flange Rotated 90
- Corrosion Protected
- Speed Sensor

T SERIES MOTORS

Char-Lynn

Disp. Cu.in. (cc)	Max. bar Cont. (int.)	Torque Nm Cont. (int.)	Max. rpm Cont. (int.)	4 Bolt	SAE-A 2 Bolt				Approx unpacked weight (Kgs)
				1"			7/8"	25mm Straight	
				Straight		6B Splined	13 Tooth	Straight	
				7/8" UNO Ports - 7/16" Ext. Drain					
4.0 (66)		138 (168)	849 (1006)	158-1638	158-1635	158-3553	-	158-3394	5.5
4.9 (80)	155 (190)	174 (212)	694 (916)	158-2010	158-2034	158-2082	158-3016	-	6
6.2 (102)		219 (264)	550 (724)	158-2011	158-2035	158-2739	158-3064	158-3208	6
8.0 (131)		251 (307)	426 (565)	158-1640	158-1639	-	-	-	6.5
9.6 (157)	138 (172)	297 (359)	355 (472)	158-2012	158-2036	158-2085	-	158-3209	6.5
11.9 (195)		359 (437)	287 (382)	158-2013	158-2037	158-2086	158-3014	-	7
14.9 (244)	127 (155)	410 (485)	229 (305)	158-2014	158-2038	158-2087	-	158-3206	7
18.7 (306)	110 (124)	441 (483)	183 (243)	158-2015	158-2039	158-2088	-	-	7.5
22.6 (370)	90 (103)	430 (480)	152 (202)	158-2016	158-2040	-	-	-	7.5

Note: A simultaneous maximum speed and maximum torque is not permitted.

Exploded View

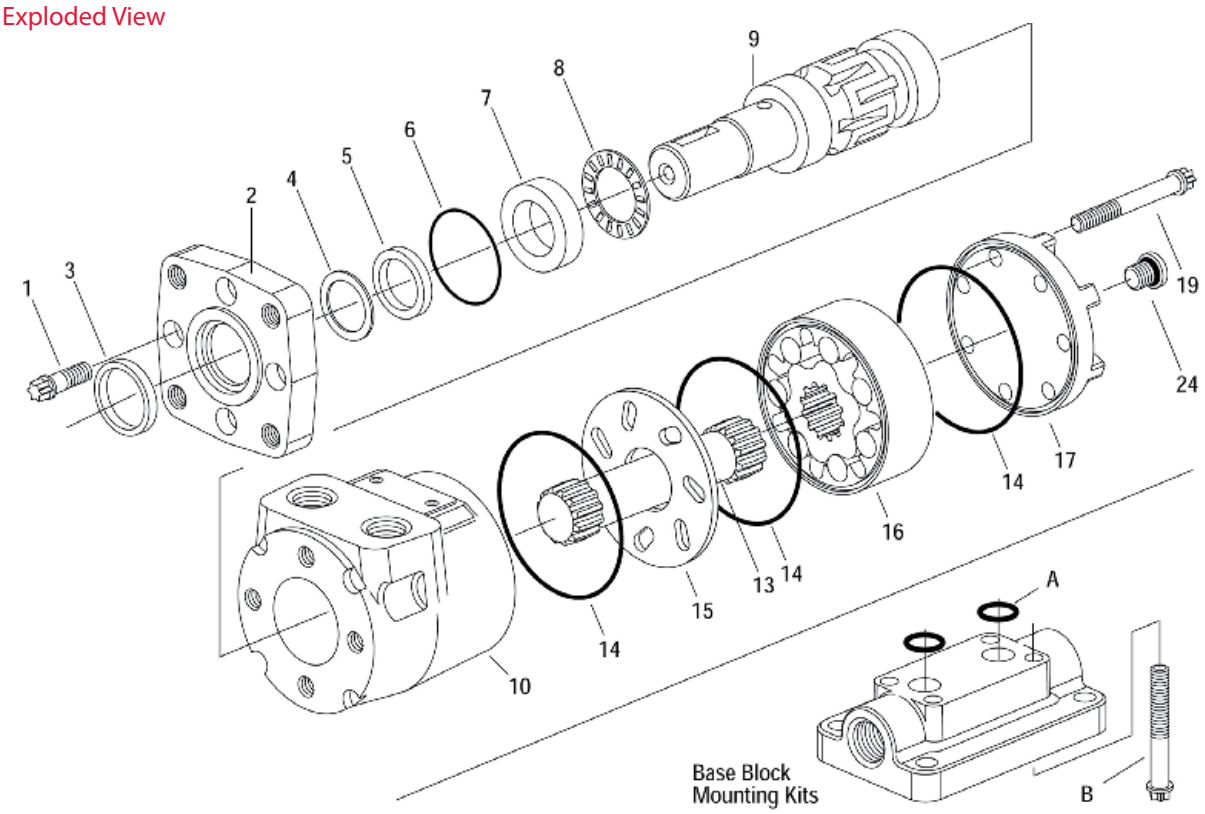

Spare Parts

Type	Description	Series of Motor 001
Shafts	1" Straight Keyed	7360-001
	1" 6B Splined	7360-002
	7/8" 13 tooth Spline	7360-016
	25mm Straight Keyed	7360-024
Seal Kits	Seal Kit (Buna N)	60564-000
	Seal Kit (Viton)	60565-000

Type	Description	Series of Motor 001
Shafts seals	Shaft Seal Std.	9057-014
	High Pressure	59954-83-001
Front Flanges	SAE A 2 bolt	22000-001
	SAE A 4 bolt	22000-002
	SAE B 2 bolt	22000-004
	Magneto Mount	22000-005

2,000 SERIES MOTORS

Char-Lynn

Features

- Current Design 104-xxxx-006 / 105-xxxx-006 / 106- xxxx-006
- Disc Valve Motors at higher pressure and torque ratings
- Standard flange mountings, wheel motors, and bearingless
- Heavy Duty taper roller bearing for supporting shaft
- Rated flow 75LPM

Seal Kits	
104-XXXX-003, 004, 005	61252-000
104-XXXX-006	61258-000

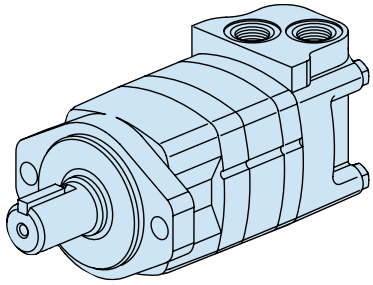

Available Options

Displacement Size

- 80cc [4.9ci]
- 100cc [6.2ci]
- 130cc [8.0ci]
- 160cc [9.6ci]
- 195cc [11.9ci]
- 245cc [14.9ci]
- 305cc [18.7ci]
- 395cc [24.0ci]
- 490cc [29.8ci]

Mounting Flange

- 4 Bolt (Bearingless) 101,6 [4.00] Pilot Dia. and 13,59 [.535] Dia. Mounting Holes on 127,0 [5.00] Dia. B.C.
- 2 Bolt (SAE A) (Standard) 82,5 [3.25] Pilot Dia. and 13,59 [.535] Mounting Holes on 106,4 [4.19] Dia. B.C.
- 4 Bolt (Wheel) 107,9 [4.25] Pilot Dia. and 13,59 [.535] Dia. Mounting Holes on 147,6 [5.81] Dia. B.C.
- 4 Bolt (Standard) 82,5 [3.25] Pilot Dia. and 13,59 [.535] Dia. Mounting Holes on 106,4 [4.19] Dia. B.C.
- 4 Bolt Magneto 82,5 [3.25] Pilot Dia. and 13,59 [.535] Dia. Mounting Holes on 106,4 [4.19] Dia. B.C.
- 2 Bolt (SAE B) 101,6 [4.00] Pilot Dia. and 14,27 [.562] Dia. Mounting Holes on 146,0 [5.75] Dia. B.C.

Output Shaft

- Bearingless
- 1 inch Dia. Straight with Woodruff Key, 1/4-20 Threaded Hole and 38,4 [1.51] Max. Coupling Length
- 1-1/4 inch Dia. Straight with Straight Key, 3/8-16 Threaded Hole and 47,3 [1.86] Max. Coupling Length
- 32 mm Dia. Straight with Straight Key, M8 x 1,25 -6H Threaded Hole and 56,4 [2.22] Max. Coupling Length
- 1-1/4 inch Dia. Splined 14 T, 3/8-16 Threaded Hole and 33,0 [1.30] Min. Full Spline Length and 45,5 [1.79] Max. Coupling Length
- 1-1/4 inch Dia. Tapered with Straight Key and Nut
- SAE 6B Splined 6 T, 1/4-20 Threaded Hole and 22,8 [.90] Min. Full Spline Length and 28,8 [1.13] Max. Coupling Length
- 7/8 inch Dia. Splined 13 T, 15,2 [.60] Min. Full Spline Length and 30,8 [1.21] Max. Coupling Length
- 25 mm Dia. Straight with Straight Key, M8 x 1,25 -6H Threaded Hole and 38,1 [1.50] Max. Coupling Length

Port Type

- 7/8-14 O-ring (Staggered) with 7/16-20 O-ring Case Drain
- G 1/2 (BSP) (Staggered) with G 1/4 (BSP) Case Drain
- Manifold Mount with 3/8-16 UNC Mounting Threads (3) and 7/16-20 O-ring Case Drain
- Manifold Mount with M10 x 1,5 -6H Mounting Threads (3) and G 1/4 (BSP) Case Drain
- 1-1/16—12 O-ring (Positioned 180 Apart) with 7/16-20 O-ring Case Drain
- 7/8-14 O-ring (End Ports) with 7/16-20 O-ring Case Drain (Rear)

Special Features

- Viton® Shaft Seal
- Viton Seals
- Free Running Geroler
- Speed Sensor
- Two Speed Option
- Two-Way Shuttle, Open for CW or CCW Output Shaft Rotation
- Corrosion Protected
- Seal Guard Package

2,000 SERIES MOTORS

Char-Lynn

Disp. Cu.in. (cc)	Max. bar Cont. (int.)	Torque Nm Cont. (int.)	Max. rpm Cont. (int.)	SAE-A 2 Bolt mount				Wheel Mount	Approx unpacked weight (Kgs)
				1" Shafts		1-1/4 Shafts			
				Straight	6B Spline	Straight	14 Tooth	Tapered	
				7/8" UNO Ports with 7/16" UNO Externalcase drain plugged					
4.9 (80)		235 (345)	799 (908)	104-1001	104-1015	104-1022	104-1029	105-1001	9.5
6.2 (100)		295 (445)	742 (924)	104-1002	104-1016	104-1023	104-1030	105-1002	10.0
8.0 (130)		385 (560)	576 (720)	104-1003	104-1017	104-1024	104-1031	105-1003	10.0
9.6 (160)	207 (310)	455 (570)	477 (713)	104-1004	104-1018	104-1025	104-1032	105-1004	10.0
11.9 (195)		540 (665)	385 (577)	104-1005	104-1019	104-1026	104-1033	105-1005	10.5
14.9 (245)		660 (820)	308 (462)	104-1006	104-1020	104-1027	104-1034	105-1006	11.0
18.7 (305)		765 (885)	246 (365)	104-1007	104-1021	104-1028	104-1035	105-1007	11.5
24.0 (395)	155 (190)	775 (925)	191 (335)	104-1143	104-1227	104-1228	104-1229	105-1060	12.0
30.0 (492)	120 (140)	845 (930)	153 (230)	-	-	104-1420	104-1442	105-1152	12.5

Note: A simultaneous maximum speed and maximum torque is not permitted.

Exploded View

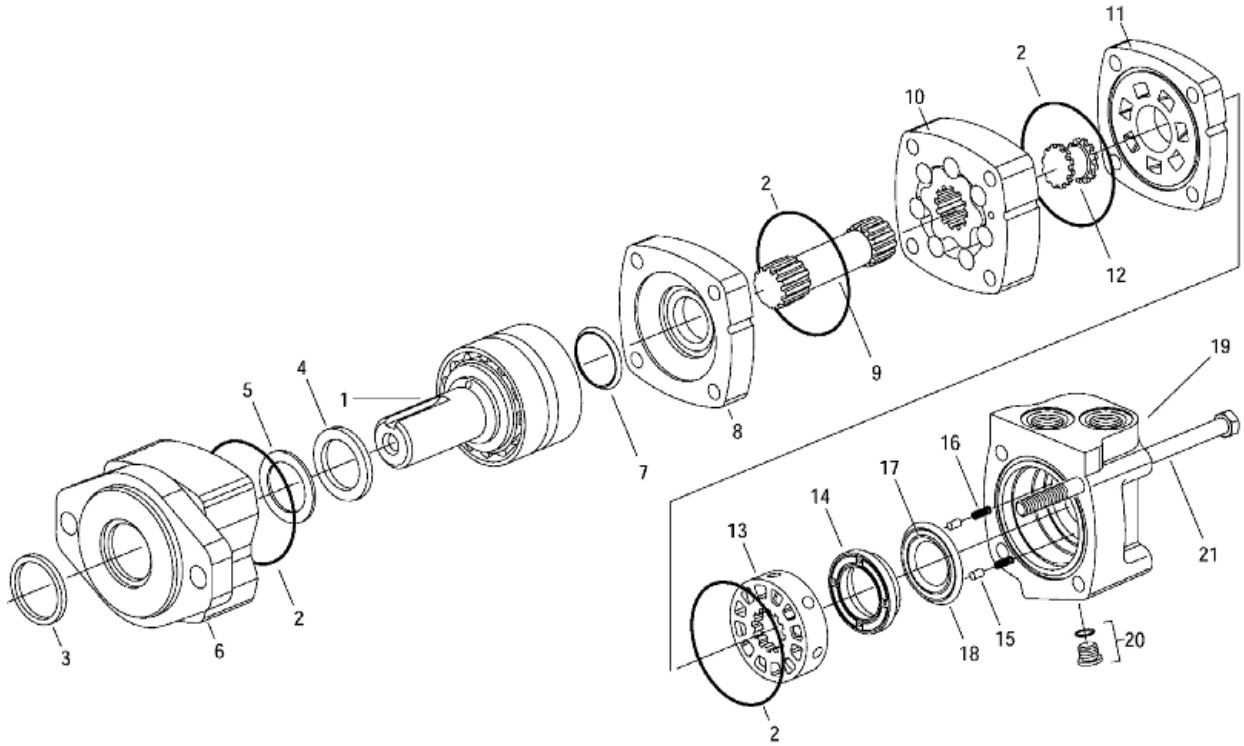

Spare Parts

Series of Motor

Type	Description	-003	-004	-005	-006
Shaft	1" Str. Keyed	7404-001			21618-001
	1-1/4" Str. Keyed	7404-003			21618-002
	1-1/4" Tapered	7404-005			21618-003
	1-1/4" 14 Tooth Spline	7404-004			21618-004
	1" 6B Spline	7404-002			21618-005
	32mm Str. Keyed	-			21618-023
Mount	SAE B 2 Bolt	-			21578-001
	Wheel Mount	8536-000			21578-003
	SAE A 2 Bolt	8537-000			21578-004
	SAE A 4 Bolt	-			21578-005
	Magneto	-			21578-008

Series of Motor

Type	Description	-003	-004	-005	-006
Housing	7/8" UNO - 7/16" Ext Drain	8355-000			21564-001
	1-1/16" 180º Ports - 7/16" Ext Drain	-	8159-002		21564-002
	3/4" BSP - 1/4" Ext Drain	-			21564-007
Seal Kit	Seal Kit (Buna N)	61252-000			61258-000
	Seal Kit (Viton)	61247-000			61263-000
Shaft Seal	Shaft Seal Std.	9057-009			
	High Pressure Shaft Seal	14857-001 replaced by 5991881-001			

4,000 SERIES MOTORS

Char-Lynn

Features

- Current Design 109-xxxx-006 / 110-xxxx-006 / 111-xxxx-006
- Disc Valve motors at higher pressure and torque ratings
- Standard flange mounting, wheel motors and bearingless
- Heavy duty taper roller bearing for supporting shaft
- Rated flow 95 lpm

Seal Kits	
109-XXXX-004 - Front	61236-000
109-XXXX-006 - Front	61281-000
109-XXXX-004,006 - Rear	61234-000

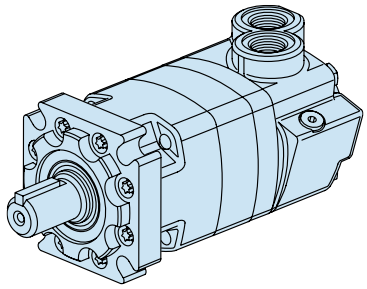

Available Options

Displacement Size

- 110cc [6.7ci]
- 130cc [7.9ci]
- 160cc [9.9ci]
- 205cc [12.5ci]
- 245cc [15.0ci]
- 310cc [19.0ci]
- 395cc [24.0ci]
- 495cc [30.0ci]
- 625cc [38.0ci]

Mounting Flange

- 4 Bolt (Bearingless) 127,0 [5.00] Pilot Dia. and 14,27 [.562] Dia. Mounting Holes 161,9 [6.38] Dia. B.C.
- 4 Bolt (SAE B) (Standard) 101,6 [4.00] Pilot Dia. and 14,7 [.58] Mounting Slots on 127,0 [5.00] Dia. B.C.
- 4 Bolt (Wheel) 139,7 [5.50] Pilot Dia. and 14,3 [.56] Dia. Mounting Holes on 165,1 [6.50] Dia. B.C.
- 4 Bolt (SAE C) (Standard) 127,0 [5.00] Pilot Dia. and 14,3 [.56] Dia. Mounting Holes on 161,9 [6.38] Dia. B.C.

Output Shaft

- Bearingless
- 1-1/4 inch Dia. Straight with Straight Key, 3/8-16 Threaded Hole and 53,1[2.09] Max. Coupling Length
- 1-5/8 inch Dia. Tapered with Straight Key and 1-1/4—18 UNEF Slotted Hex. Nut
- 1-1/4 inch Dia. Splined 14 T with 38,1 [1.50] Min. Full Spline Length and 53,1 [2.09] Max. Coupling Length
- 1-1/2 inch Dia. Splined 17 T with 31,2 [1.23] Min. Full Spline Length
- 40 mm Dia. Straight with Straight Key, M12 x 1,75-6H Threaded Hole

Port Type

- 1-1/16—12 O-ring with 7/16-20 O-ring Case Drain and Check Valve
- G 3/4 (BSP) O-ring with G 1/4 (BSP) O-ring Case Drain and Check Valve
- 3/4 inch 4 Bolt Split Flange with 7/16-20 O-ring Case Drain and Check Valve
- 7/8-14 O-ring with 9/16-18 O-ring Case Drain with Shuttle Valve
- M22 x 1,5-6H (ISO) O-ring with M12 x 1,5-6H O-ring Case Drain with Shuttle Valve

Special Features

- Viton Shaft Seal
- Viton Seals
- Two-Way Shuttle, Open for CW or CCW Output Shaft Rotation
- One-Way Shuttle, Open for CW Output Shaft Rotation
- One-Way Shuttle, Open for CCW Output Shaft Rotation
- Corrosion Protected

4,000 SERIES MOTORS

Char-Lynn

Disp. Cu.in. (cc)	Max. bar Cont. (int.)	Torque Nm Cont. (int.)	Max. rpm Cont. (int.)	SAE-A 2 Bolt			Wheel Mount	Approx unpacked weight (Kgs)
				1-1/4"			1-5/8"	
				Straight	14 Tooth	Tapered	Tapered	
				1-1/16" UNO Ports - 7/16" UNO CD plugged				
6.7 (110)	207 (310)	320 (470)	697 (868)	109-1100	109-1114	109-1107	110-1081	18.5
7.9 (130)		375 (560)	722 (862)	109-1101	109-1115	109-1108	110-1082	18.5
9.9 (160)		485 (705)	582 (693)	109-1102	109-1116	109-1109	110-1083	18.5
12.4 (205)		600 (800)	459 (546)	109-1103	109-1117	109-1110	110-1084	18.5
15 (245)	207 (260)	705 (845)	383 (532)	109-1104	109-1118	109-1111	110-1085	19.0
19 (310)		850 (1065)	303 (422)	109-1105	109-1119	109-1112	110-1086	20.0
24 (395)	185 (240)	930 (1185)	239 (376)	109-1106	109-1120	109-1113	110-1087	20.5
30 (495)	140 (170)	945 (1170)	191 (305)	109-1212	109-1363	109-1479	110-1116	22.0
38 (625)	115 (140)	970 (1180)	151 (241)	109-1215	109-1219	109-1455	110-1117	23.5
Note: A simultaneous maximum speed and maximum torque is not permitted.								

Exploded View

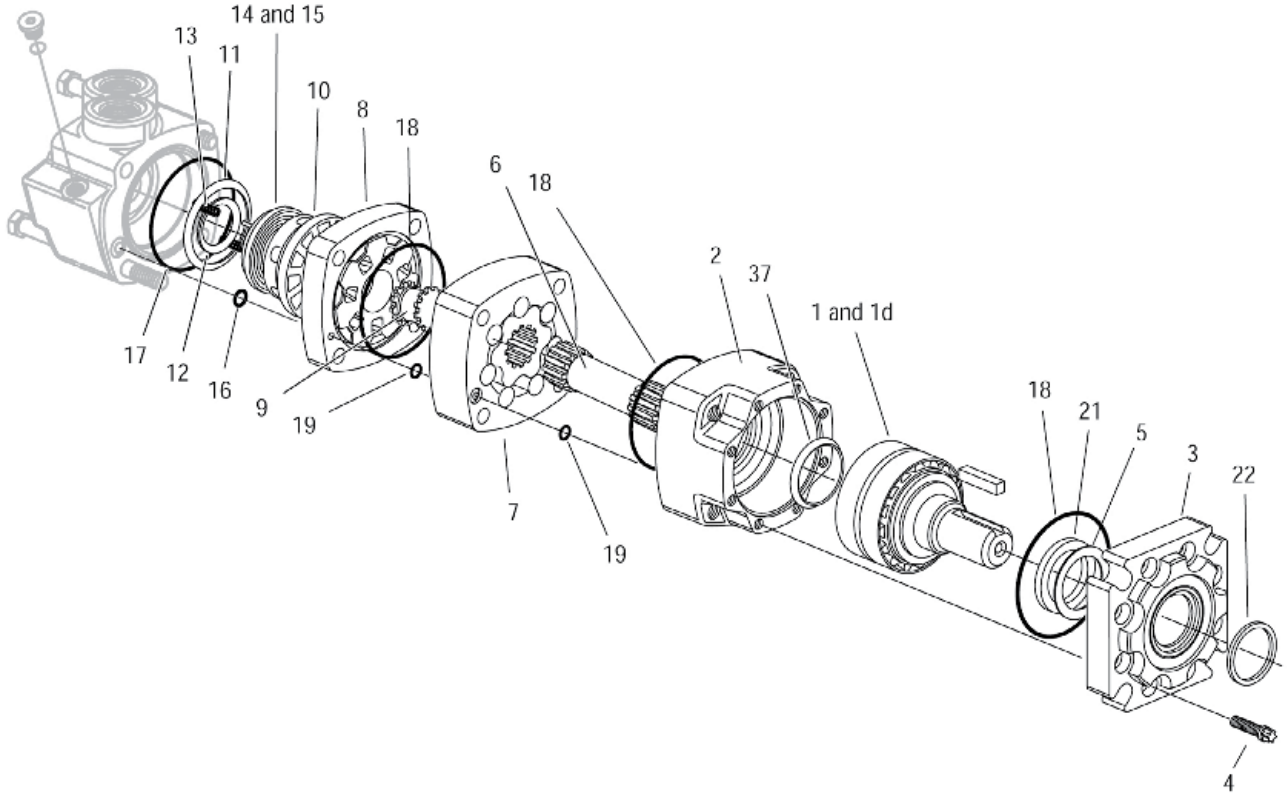

Spare Parts

Type	Description	Series of Motor -004	Series of Motor -006
Shaft and Bearing Kit	1-1/4" Str. Keyed	8709-001	23310-001
	1-5/8" Tapered	8709-002	23310-002
	1-1/4" 14T Spline	8709-003	23310-003
	1-1/2" 17T Spline	8709-009	23310-009
	40mm Str. Keyed	8709-010	23310-010
	1-1/4" 14T Spline for Seal Guard	-	23310-014

Type	Description	Series of Motor -004	Series of Motor -006
Seal Kit	Seal Kit Std. - Rear	61234-000	
	Seal Kit Std. - Front	61236-000	
	Seal Kit Viton - Complete	61248-000	61282-000
	Seal Kit Tapered shaft and Seal Guard - Shaft End only		61290-000
Shaft Seal	Shaft Seal Standard	9057-012	

6,000 SERIES MOTORS

Char-Lynn

Features

- Current Design 112-xxxx-006 / 113-xxxx-006 / 114-xxxx-006
- Disc Valve motors at higher pressure and torque ratings
- Standard flange mounting, wheel motors and bearingless
- Heavy duty taper roller bearing for supporting shaft
- Rated flow 150 lpm
- Similar to the Danfoss OMV motors
- The Case Drain comes plugged

Seal Kits	
112-XXXX-005,006 - Front	61237-000
112-XXXX-005,006 - Rear	61238-000

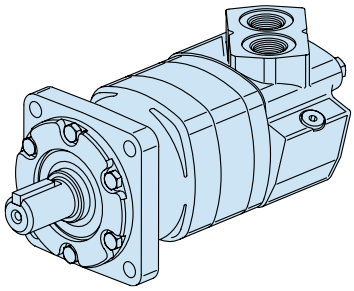

Available Options

Displacement Size

- 195cc [11.9ci]
- 245cc [15.0ci]
- 310cc [19.0ci]
- 390cc [23.9ci]
- 490cc [30.0ci]
- 625cc [38.0ci]
- 985cc [60.0ci]

Mounting Flange

- 4 Bolt (Bearingless) 127,0 [5.00] Pilot Dia. and 14,3 [.56] Dia. Mounting Holes on 161,9 [6.38] Dia. B.C.
- 4 Bolt (SAE CC)(Standard) 127,0 [5.00] Pilot Dia. and 14,3 [.56] Mounting Holes on 161,9 [6.38] Dia. B.C.
- 4 Bolt (Wheel) 139,7 [5.50] Pilot Dia. and 14,3 [.56] Dia. Mounting Holes on 184,1 [7.25] Dia. B.C.

Output Shaft

- Bearingless
- 1-1/2 inch Dia. Straight with Straight Key, 3/8-16 Threaded Hole and 56,7[2.23] Max. Coupling Length
- 1-3/4 inch Dia. Tapered with Straight Key and 1-1/4—18 UNEF Slotted Hex. Nut
- 1-1/2 inch Dia. Splined 17 T with 40,3 [1.59] Min. Full Spline Length and 3/8-16 Threaded Hole
- 40 mm Dia. Straight with Straight Key, M12 x 1,75-6H Threaded Hole

Port Type

- 1-5/16-12 O-ring with 7/16-20 O-ring Case Drain and Shuttle Valve
- G 1 (BSP) O-ring with G 1/4 (BSP) O-ring Case Drain and Check Valve
- 3/4 inch 4 Bolt Split Flange with 7/16-20 O-ring Case Drain and Check Valve

Special Features

- Viton Shaft Seal
- Viton Seals
- Two-Way Shuttle, Open for CW or CCW Output Shaft Rotation
- Corrosion Protected

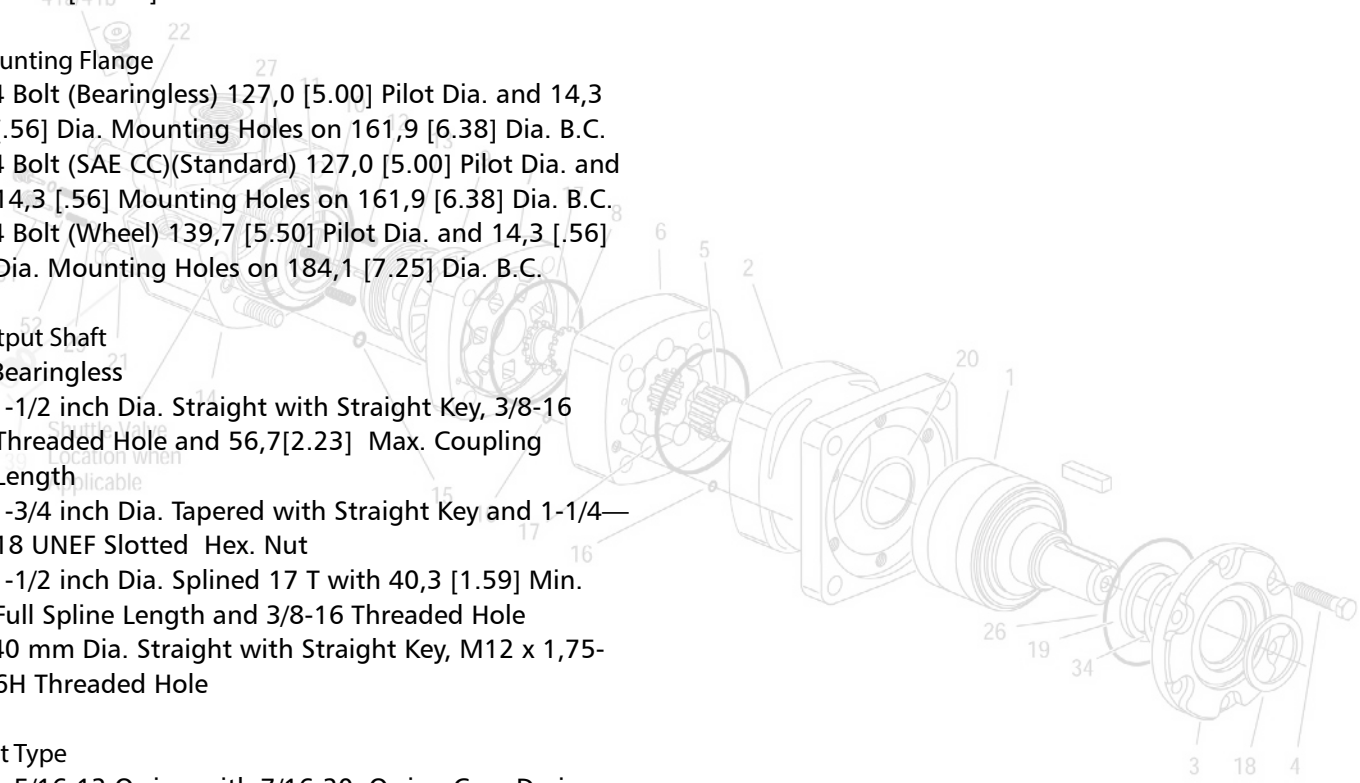

CALL 1800 660 249
info@berendsen.com.au

6,000 SERIES MOTORS

Char-Lynn

Disp. Cu.in. (cc)	Max. bar Cont. (int.)	Torque Nm Cont. (int.)	Max. rpm Cont. (int.)	SAE CC 4 Bolt 1-1/2" Straight	SAE CC 4 Bolt 1-1/2" 17 Tooth	Wheel Mount 1-3/4" Tapered	Approx unpacked weight (Kgs)
				1-5/16" UNO Ports - 7/16" UNO CD			
11.9 (195)	207 (310)	575 (860)	775 (866)	112-1064	112-1058	113-1070	25.0
15 (245)		735 (1100)	615 (834)	112-1065	112-1059	113-1071	25.5
19 (310)		930 (1355)	485 (698)	112-1066	112-1060	113-1072	26.0
23.9 (390)		1155 (1635)	387 (570)	112-1067	112-1061	113-1073	26.5
30 (490)	207 (275)	1445 (1885)	307 (454)	112-1068	112-1062	113-1074	27.5
38 (625)	170 (221)	1480 (1898)	241 (355)	112-1107	112-1109	113-1093	28.5
60 (985)	140 (140)	1685 (1873)	153 (230)	112-1069	112-1063	113-1075	30.5

Note: A simultaneous maximum speed and maximum torque is not permitted.

Exploded View

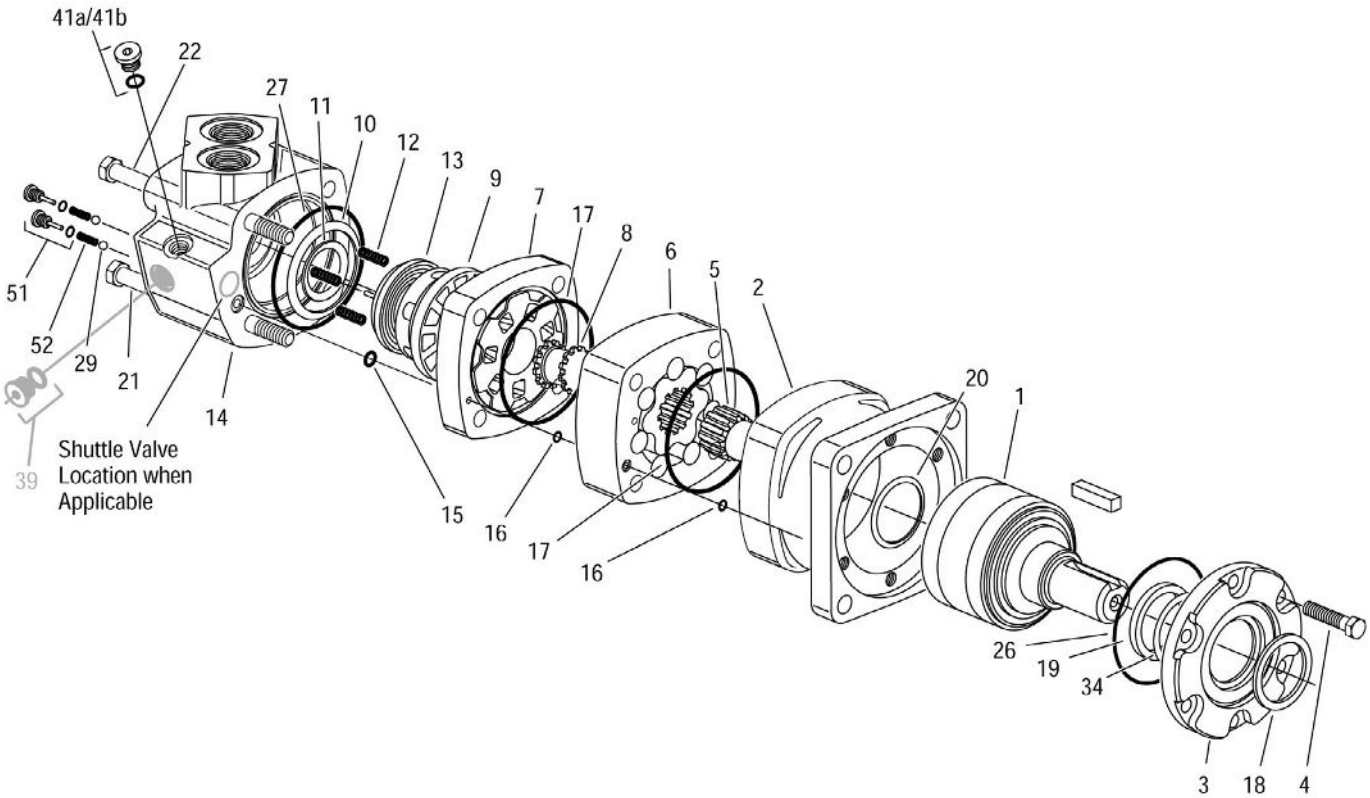

Spare Parts

Series of Motor

Type	Description	-005	-006
Shaft	1-1/2" Str. Keyed	8711-001	201837-001
	1-3/4" Tapered	8711-002	201837-002
	1-1/2" 17T Spline	8711-003	201837-003
	40mm Str. Keyed	8711-010	201837-010
Shaft Seal	Shaft Seal	9057-013	
Seal Kit	Seal Kit Std. (Buna N) - Rear	61238-000	
	Seal Kit Std. (Buna N) - Shaft	61237-000	
	Seal Kit Std. (Viton) - Complete	61246-000	

10,000 SERIES MOTORS

Char-Lynn

Features

- Disc Valve motors at higher pressure and torque ratings
- Standard flange mounting, wheel motors and bearingless
- Heavy duty taper roller bearing for supporting shaft
- Rated flow 170 lpm
- Intermittent operation 10% of every minute.

Seal Kits	
119-XXXX-002,003 - Front	6406-000
119-XXXX-002,003 - Rear	6405-000

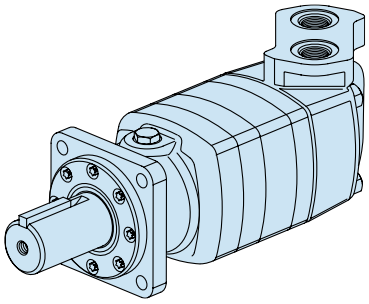

Available Options

Mounting Flange

- 4 Bolt (Bearingless) 152,4 [6.00] Pilot Dia. and 20,88 [.522] Dia. Mounting Holes 228,6 [9.00] Dia. B.C.
- 4 Bolt (Standard) 127,0 [5.00] Pilot Dia. and 17,02 [.670] Mounting Holes on 161,9 [6.37] Dia. B.C.
- 4 Bolt (Wheel) 177,8 [7.00] Pilot Dia. and 17,02 [.670] Dia. Mounting Holes on 209,5 [8.25] Dia. B.C.

Output Shaft

- Bearingless
- 2-1/4 inch Dia. Straight with Straight Key, 1/2-20 Threaded Hole and 97,5[3.84] Max. Coupling Length
- 2-1/4 inch Dia. Tapered with Straight Key and 1-1/2—18 UNEF Slotted Hex. Nut
- 2-1/8 inch Dia. Splined 16 T with 52,1 [2.05] Min. Full Spline Length and 1/2-20 UNF Threaded Hole

Port Type

- 1-5/16-12 O-ring with 9/16-18 O-ring Case Drain
- 1-1/4 Split Flange with 9/16-18 O-ring Case Drain

Special Features

- Viton Shaft Seal
- Viton Seals
- Two Speed Option
- Corrosion Protected

10,000 SERIES MOTORS

Char-Lynn

Disp. Cu.in. (cc)	Max. bar Cont. (int.)	Torque Nm Cont. (int.)	Max. rpm Cont. (int.)	SAE-C 4 bolt 2-1/4" Str. Keyed 1-5/16" UNO ports - 7/16" Ext. Drain	Approx unpacked weight (Kgs)
21 (345)	207 (275)	1040 (1390)	501 (784)	-	50.0
29.3 (480)		1475 (1965)	354 (552)	119-1029	50.0
40.6 (665)	207 (260)	2085 (2610)	254 (279)	119-1030	50.0
57.4 (940)	190 (240)	2700 (3440)	179 (279)	119-1031	50.0

Note: A simultaneous maximum speed and maximum torque is not permitted.

Exploded View

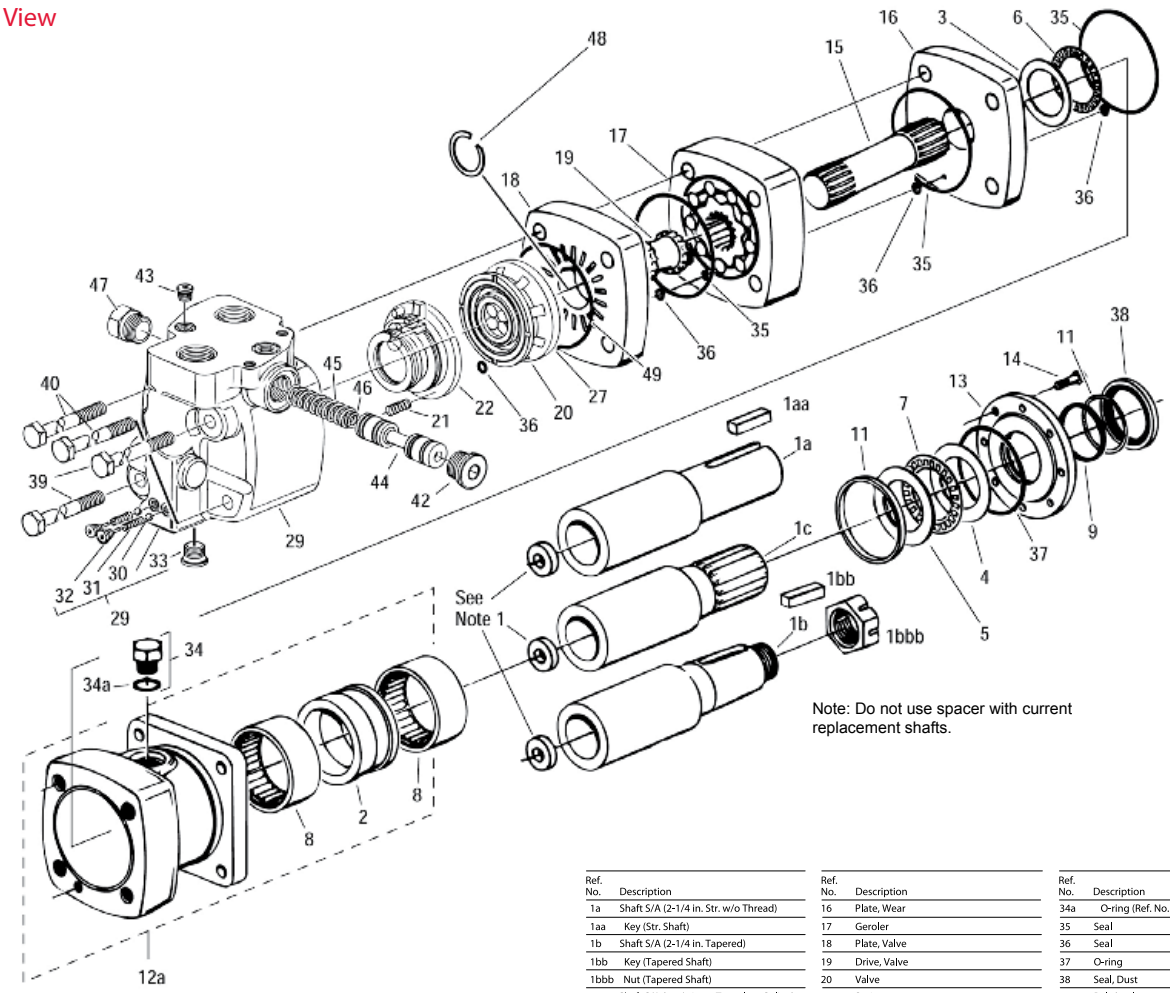

Ref. No.	Description
1a	Shaft S/A (2-1/4 in. Str. w/o Thread)
1aa	Key (Str. Shaft)
1b	Shaft S/A (2-1/4 in. Tapered)
1bb	Key (Tapered Shaft)
1bbb	Nut (Tapered Shaft)
1c	Shaft S/A (2-1/8 in. 16T Involute Spline)
2	Spacer, Bearing
3	Thrust Washer, Rear
4	Whasher, Thrust
5	Whasher, Thrust
6	Thrust Bearing, Rear
7	Thrust Bearing, Front
8	Bearing, Radial
9	Seal, Shaft
10	Washer, Backup
11	Spacer, Front Bearing
12a	Housing, Bearing (Std. Mtr. Mtg. Flange)
12b	Housing, Bearing (Whl. Mtr. Mtg. Flange)
13	Retainer, Front
14	Screw, Cap
15	Drive

Ref. No.	Description
16	Plate, Wear
17	Geroler
18	Plate, Valve
19	Drive, Valve
20	Valve
21	Spring
22	Balance Ring/Pin Assembly
23	O-ring
24	Ring, Back-up
25	O-ring
26	Ring, Back-up
27	O-ring
28	Ring, Back-up
29	Valve Housing
30	Ball
31	Spring
32	Plug/O-ring S/A
32a	O-ring (Ref. No. 32)
33	Plug/O-ring S/A
33a	O-ring (Ref. No. 33)
34	Plug/O-ring S/A

Ref. No.	Description
34a	O-ring (Ref. No. 34)
35	Seal
36	Seal
37	O-ring
38	Seal, Dust
39	Bolt (replaces and interchanges with studs)
40	Bolt (replaces and interchanges with studs)
41	Flange, Mounting /Wear Plate
42	Plug/O-ring S/A
42a	O-ring (Ref. No. 42)
43	Plug/O-ring S/A
43a	O-ring (Ref. No. 43)
44	Spool, Control
45	Spring, Compression
46	Spring, Compression
47	Plug/O-ring S/A
47a	O-ring (Ref. No. 47)
48	Ring, Retaining
49	O-ring
50	Plug, Pipe

Spare Parts

Series of Motor

Type	Description	-002	-003	-004
Seal Kit	Seal Kit Std. (Rear)	6405-000		
	Seal Kit Std. (Shaft)	6406-000		

STEERING UNITS

Char-Lynn

Part Number	Series	Disp. Cu.in. (cc)	Spline	Type	Rated Flow GPM (lpm)
211-1007-002	Series 6	4.5 (75)	12T 16/32 Spline	Open Centre Non Load Reaction	4-8 (15-30)
211-1008-002		5.9 (95)			
211-1009-002		7.3 (120)			
211-1010-002		9.7 (160)			
211-1011-002		11.3 (185)			
211-1012-002		14.1 (230)			
211-1158-002		17.9 (295)			
211-1177-002	Series 12	22.6 (370)			8-16 (30-60)
211-1178-002		28.2 (460)			
211-1160-002		35.9 (590)			
211-1179-002		45.1 (740)			
212-1017-002		45.1 (740)		Closed Centre Non Load Reaction	

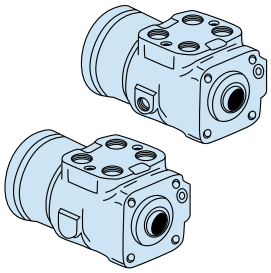

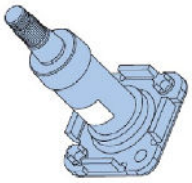

Steering Columns

Part Number	Shaft Type	Length Inch (mm)	Spline	Horn Wire	Steering wheel to suit	Cap	Horn Button	Retaining Nuts
204-1001-007	Keyed	2.5 (65)	12T 16/32 Spline	No	-	209-1005-001	N/A	-
204-1002-007	Serrated			No	209-1007-001			21084-000
204-1003-007	Keyed	6.0 (155)		No	-			-
204-1004-007	Serrated			No	209-1007-001			21084-000
204-1007-007	Serrated			1 Wire		N/A	208-1013	
204-1005-007	Keyed	30.0 (760)		No	-	209-1005-001	N/A	-
204-1006-007	Serrated			No	209-1007-001			21084-000
204-1017-007	Serrated	18.0 (460)		1 Wire		N/A	208-1013	

Please Note: The Horn Button and Cap are to suit the 209-1007-001.

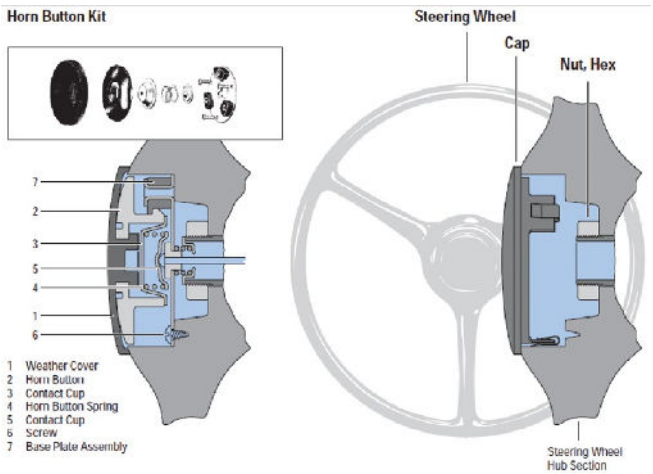

Notes

- 21084-000 has 13/16" - 20 UNEF thread
- The Keyed shaft Type has a thread of 3/4" -16 UNF
- Eaton do not have the Nut or Wheel to suit the Keyed type Steering Columns

NOTES

NOTES

NOTES

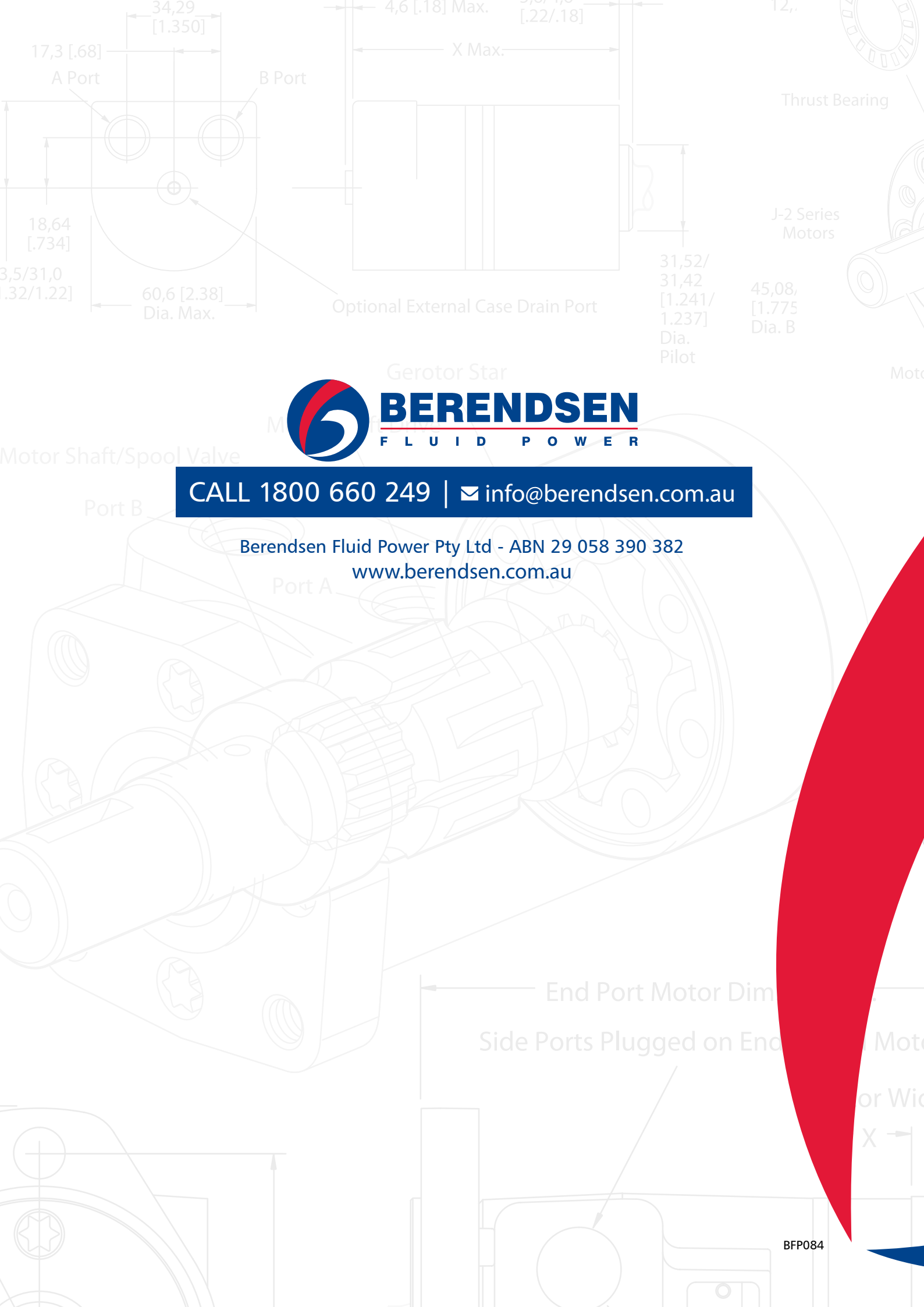

BERENDSEN
FLUID POWER

CALL 1800 660 249 | info@berendsen.com.au

Berendsen Fluid Power Pty Ltd - ABN 29 058 390 382
www.berendsen.com.au